FORUM
CANAPOLIO

U.S.. PATENT #4,293,900

CAN-175/2-MH-V

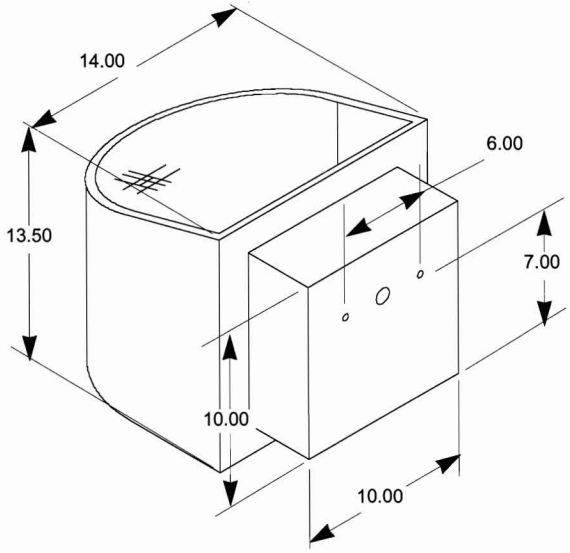

FORUM/CANAPOLIO is an ideal fixture to use when perimeter mounting and/or a clean ceiling appearance is required. The Canapolio reflector is a multi faceted prefocused, specular parabolic design. The individual segments of highly polished aluminum guarantee complete control of lumen output to yield the widest, most uniform distribution pattern.

Applications: Corridors, Under Canopies, Covered Walkways, Malls, and Natatoriums.

Mounting height: Because of the reflector's unique ability to distribute light over a wide, uniform area, Forum/Canapolio can be mounted closer to the ceiling than any other indirect lighting system. Distance from the ceiling to the top of the fixture can be a minimum of 18".

SPECIFICATION:

Optical System - Shall consist of 5 individual, highly polished, aluminum reflector segments. Each segment is hydroformed with 6 prefocused, linear parabolic surfaces. Each surface is concave to minimize the amount of light that passes through the arc tube of the lamp.

Housing - Shall be fabricated from 18 gauge steel (Standard Bronze finish). The fixture body shall be formed, welded, filled and ground smooth to provide a seamless finished appearance.

Ballast - Shall be core and coil, HPF, CWA and thermally protected. The ballast are mounted to the internal structure of the ballast housing which is mounted to the wall. REMOTE: Ballast shall be encased and potted. Thermally protected with a B sound rating

Top Lens - Shall be .125" thick clear tempered glass.

Bottom Lens - Shall be .125" thick frosted tempered glass.

PRODUCT LISTING: Shall be U.L. listed.

HOW TO SPECIFY

WATTAGE 175W

LIGHT SOURCE MH=METAL HALIDE

EM-S=INCANDESCENT (D.C. BAYONET) SOCKET ONLY
EM-Q=INCANDESCENT (D.C. BAYONET) STAND-BY LIGHT 120V. ONLY - 250W MAX.

CAN - 175/1 MH - V -120 - FINISH - OPTION

CANAPOLIO

TYPE OF BALLAST
1= REMOTE
2= Integral (core and coil)

VERTICAL LAMP

VOLTAGE 120 OR 277

Bronze (Standard)
C = Custom

CANDLEPOWER SUMMARY

CATALOG NO.: CAN-175-MH-V
LAMP TYPE: MH175/c/u
LUMENS: 14,000
FIXTURE EFFICIENCY: 31.6%
LUMINAIRE INPUT WATTS: 210
TEST REPORT NO.: B.A.L. 7475.0

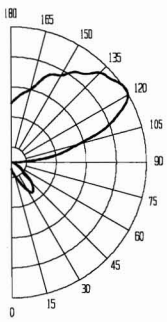

ANGLE	CANDELA	LUMENS
180	751	
175	809	77
165	958	247
155	1235	440
145	1403	633
135	1613	769
125	1726	780
115	1546	590
105	893	331
95	314	117
90	19	
85	28	1
75	61	11
65	102	31
55	159	70
45	366	108
35	468	110
25	318	72
15	183	31
5	112	8
0	80	

FORUM, INC. 214 NORTH LEXINGTON AVE. PITTSBURGH, PA 15208 Phone (412) 244-8780 Fax (412) 244-9032

FORUM
CANAPOLIO

CAN-175/2-MH-V-120-FINISH-OPTIONS

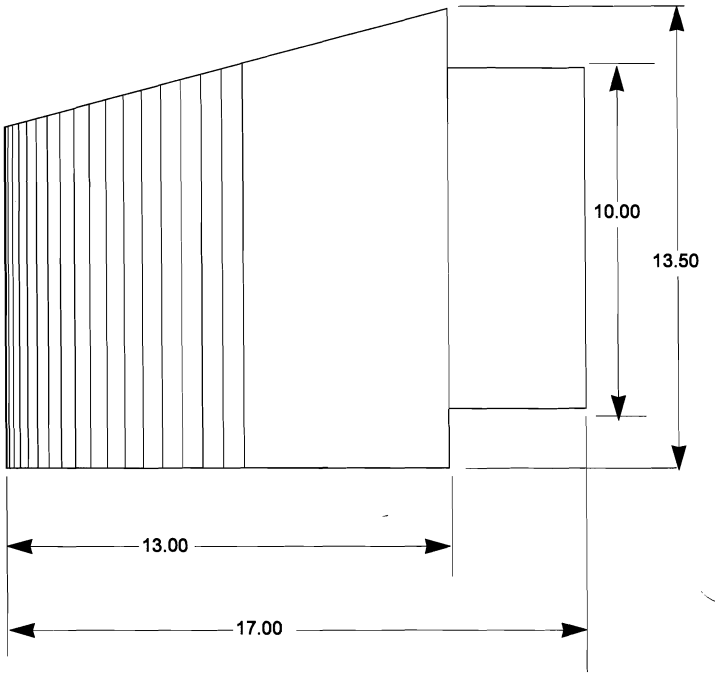

FORUM, INC. 214 NORTH LEXINGTON AVE. PITTSBURGH, PA 15208 Phone (412) 244-8780 Fax (412) 244-9032