FORUM

Frame

Installation Guide

IND739

BEFORE YOU BEGIN

Read these instructions completely and carefully.

WARNING/AVERTISSEMENT

RISK OF ELECTRIC SHOCK

- Turn power off before inspection, installation or removal.
- Properly ground electrical enclosure.

RISK OF ELECTRIC SHOCK

- Follow all NEC and local codes.
- Use only UL approved wire for input/output connections. Minimum size 18 AWG (0.75mm^2).

RISQUES DE DÉCHARGES ÉLECTRIQUES

- Coupez l'alimentation avant d'inspecter, installer ou déplacer le luminaire.
- Assurez-vous de correctement mettre á la terre le boítier d'alimentation électrique.

RISQUES D' INCENDIE

- Respectez tous les codes NEC et codes locaux.
- N'utilisez que des fils approuvés par UL pour les entrées/sorties de connexion. Taille minimum 18 AWG (0.75mm^2).

Save These Instructions

These instructions do not purport to cover all details or variations in components nor to provide for every possible contingency to be met in connection with installation, operation or maintenance. Should further information be desired or should particular problem arise which are not covered sufficiently for the purchaser's purpose, the matter should be referred to GE Current, a Daintree company.

Current does not claim liability for any installation not performed according to this guide or not by a qualified electrician.

Prepare Electrical Wiring

Electrical Requirements

The LED luminaire must be connected to the mains supply according to its ratings on the product label.

Grounding Instructions

The grounding and bonding of the overall system shall be done in accordance to local electric code of the country where the luminaire is installed.

For Your Safety

- Installation to be performed by factory trained or qualified personnel. Ensure this manual is provided to the installers and users.
- Use this product only in the manner intended by the manufacturer. If there are any questions or concerns, contact the manufacturer.

Included Parts & Hardware

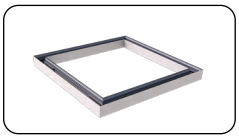

Housing(s) - Suspended, Surface, Stem, Standoff

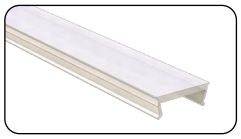

Lens(es) - Suspended, Surface, Stem, Standoff

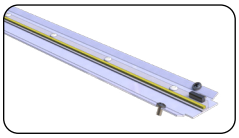

Geartray(s) - Suspended, Surface, Stem, Standoff

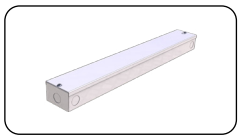

Driver Box - Suspended, Surface, Stem, Standoff

Cable Assembly - Suspended

Standoff

Stem Assembly - Stem

GE current
a Daintree company

Installation

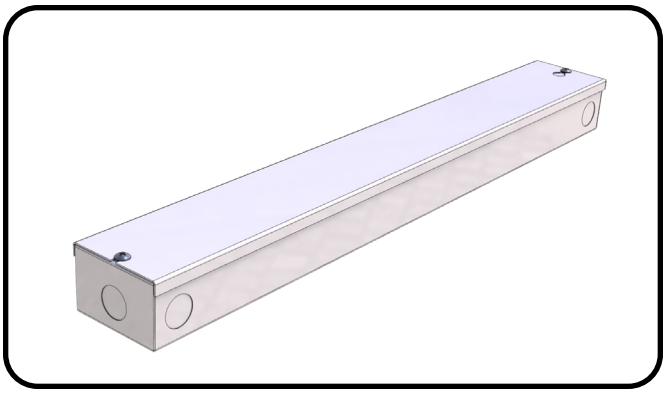

1 Mount remote driver box to structure with in 50' from fixture. Run wires from driver box to fixture.

2 Align fixture housing flush to ceiling or wall depending what has been specified and secure through factory-drilled holes using screws (not provided) appropriate for surface type.

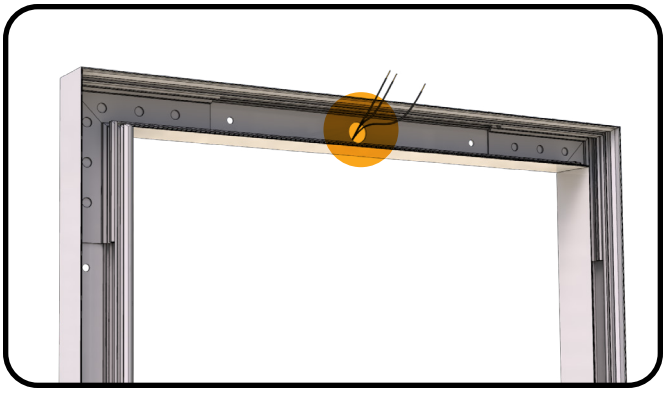

3 **Turn off the power to the fixture's circuit.** 7/8" power feed hole is provided for wiring to be fed into fixture.

COMPONENTS FOR SURFACE MOUNTING

The Frame series surface mounting system consists of four main components: the housing **(A)**, the geartray **(B)**, the lens **(C)**, the remote drive box **(D)**. These items come shipped with and attached to the fixture to help ensure proper counts and clarification during assembly.

In preparation for installation, remove geartray **(B)** and lens **(C)** from housing **(A)** and set aside in a safe area.

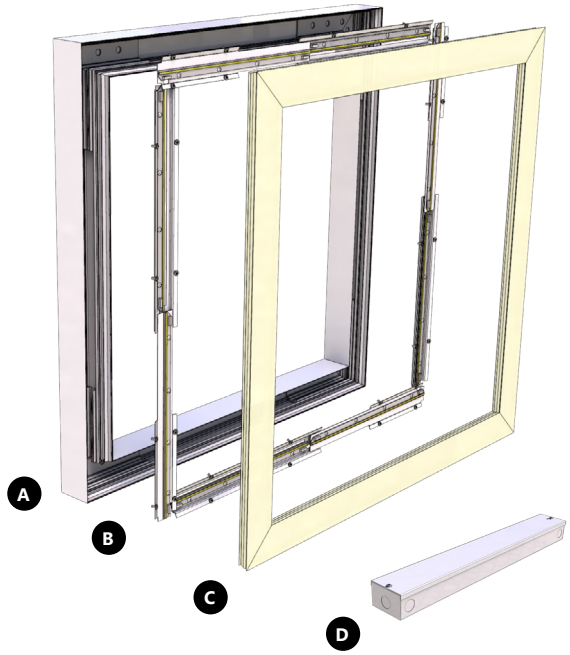

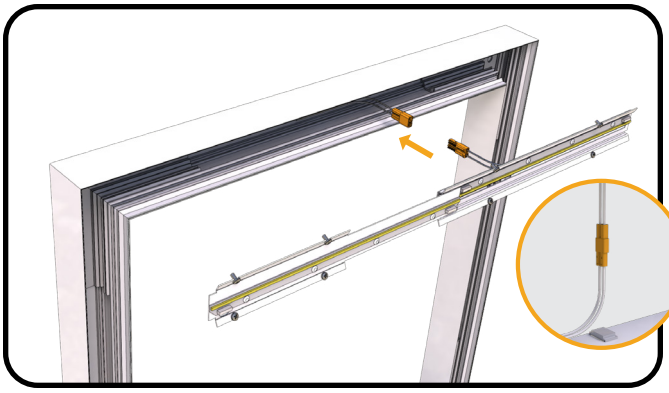

4 Connect geartray to fixture housing via provided electrical junction and re-insert geartray and lens back into housing.

Installation

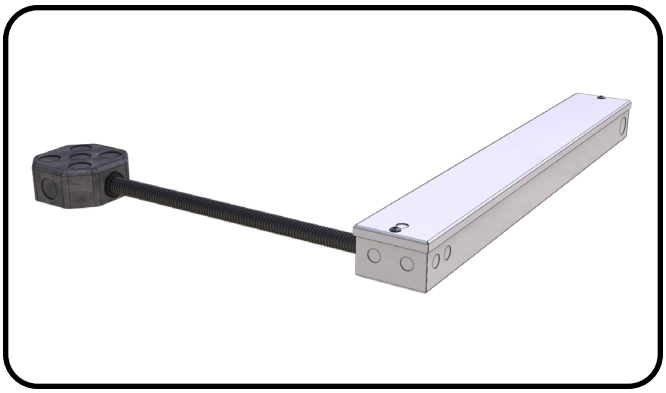

1 Mount remote driver box to structure within 50' from fixture. Run positive wire to first junction box and negative wire to second junction box to make conductive cable connection. If fixture is hung by conical cables bring both positive and negatives wires to the same junction box.

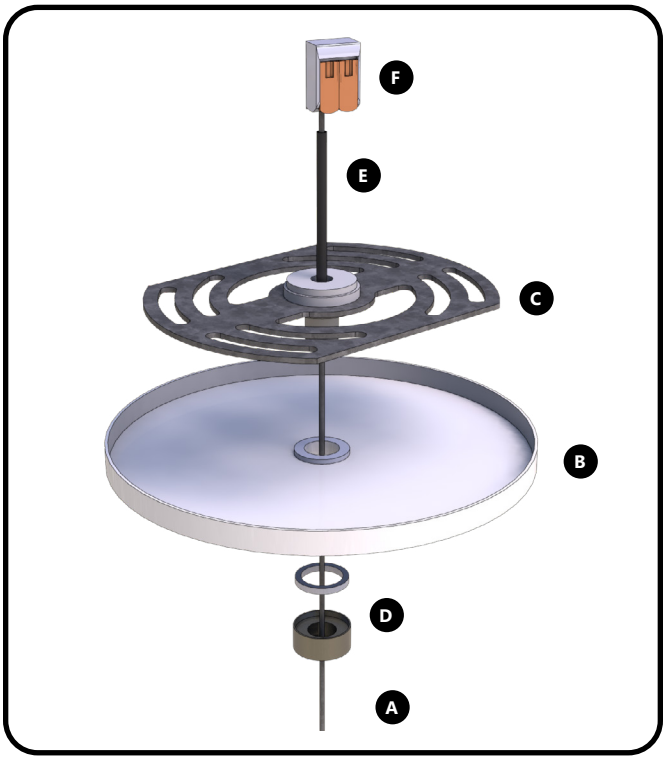

2 **Turn off the power to the fixture's circuit.** With the fixture supported in the air, raise the cable assemblies to their corresponding junction boxes, thread the conductive cable **(A)** through the canopy **(B)**, cross bar **(C)**, and respective components **(D)**. Apply heat shrink **(E)** to the exposed conductive cable and connect the power feed from the ceiling side to the conductive cable via quick connect **(F)**.

Install the junction box cross bar, slide canopy up into place and thread on remaining hardware to hold the canopy in place. Follow governing electrical code for making your connections in the junction box.

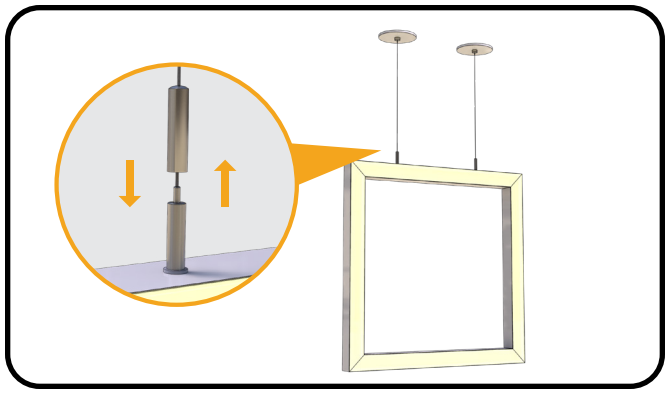

3 With fixture now mounted, you can slowly lower it into place. Fine adjustments to height and leveling can be made at the gripper assemblies located on the upper surface of the fixture.

COMPONENTS FOR SUSPENDED MOUNTING

The Frame series cable mounting system consists of two main components: the power feed assemblies **(A)** and the remote mount driver box **(B)**. Both items come shipped with the fixture to help ensure proper counts and clarification during assembly.

In preparation of installation, ensure that crossbars, canopy covers, cable grippers and cord grips are all accounted for. The cable mounting system utilizes conductive suspension cables to be used with a standard j-box for each cable. Be sure to follow all governing code related to wiring, structural integrity, and use of materials.

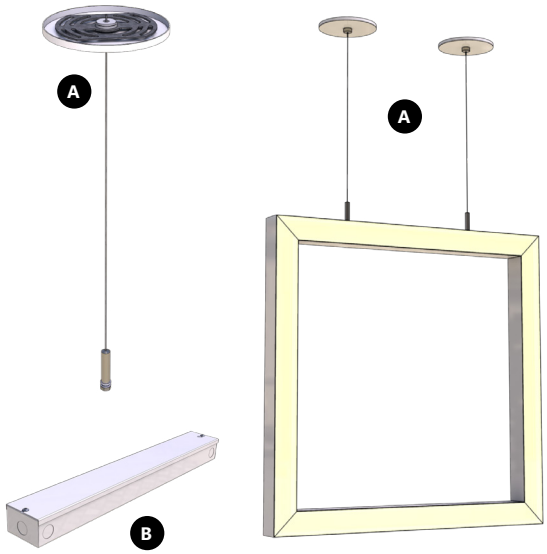

Installation

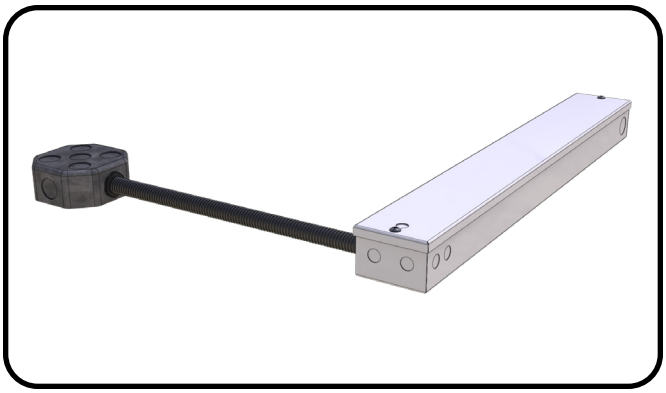

1 Mount remote driver box to structure with in 50' from fixture. Run wires from driver box to junction box.

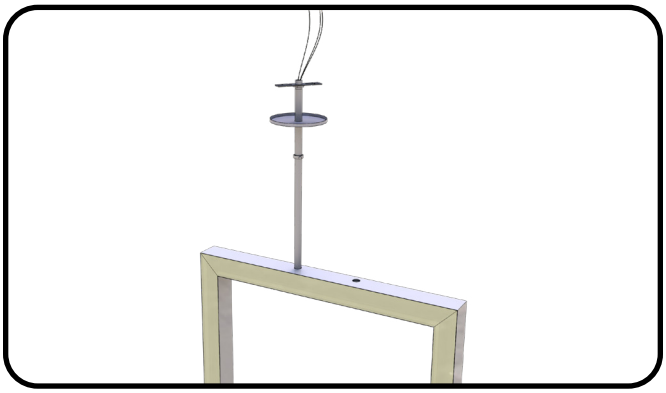

2 Thread fixture wires through stem, canopy, cross bar, and thread stem into fixture.

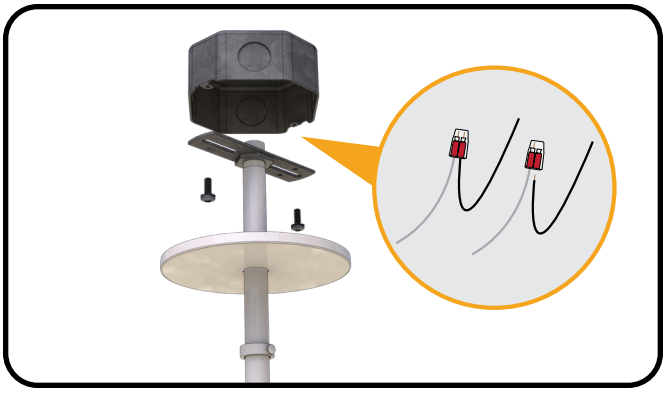

3 **Turn off the power to the fixture's circuit.** Support the fixture at the junction box and connect the wires from the fixture to the junction box.

COMPONENTS FOR STEM MOUNTING

The Frame series stem mounting system consists of two main components: the stem canopy assemblies **(A)** and the remote mount driver box **(B)**. Both items come shipped with the fixture to help ensure proper counts and clarification during assembly.

In preparation of installation, ensure that crossbars, canopy covers, and stems are all accounted for. Be sure to follow all governing code related to wiring, structural integrity, and use of materials.

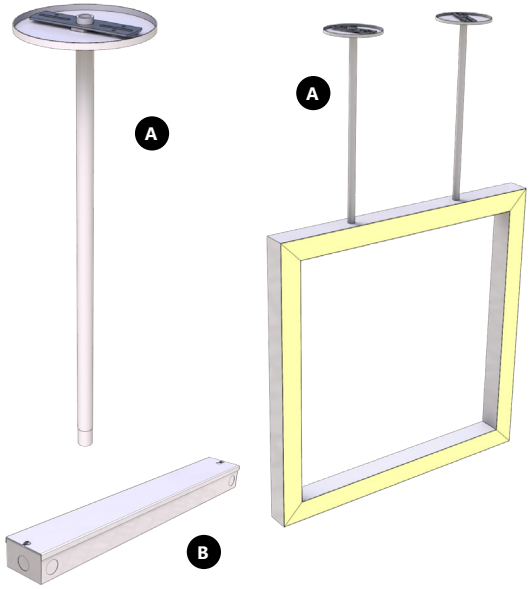

4 Mount cross bar to junction box and lift canopy and lock nut into place.

Installation

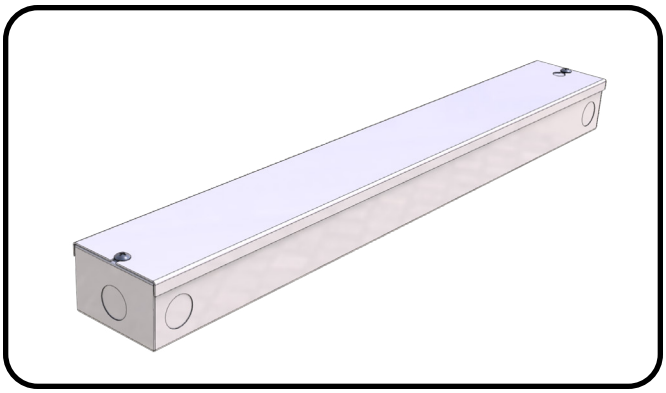

1 Mount remote driver box to structure with in 50' from fixture. Run wires from driver box to fixture.

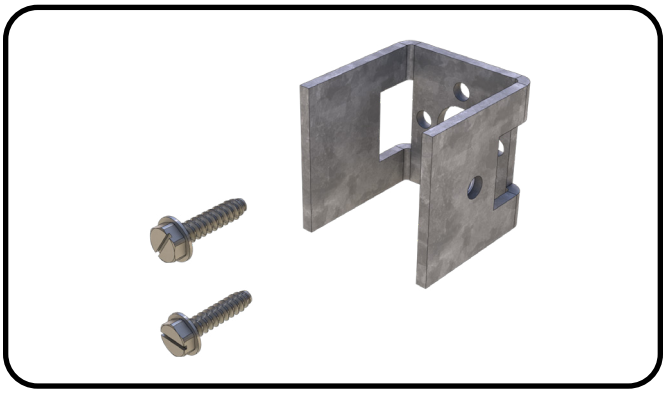

2 Mount first bracket from standoff to mounting surface with appropriate hardware, provided by installing contractor. Note stand off mount hole to face the inside of the fixture.

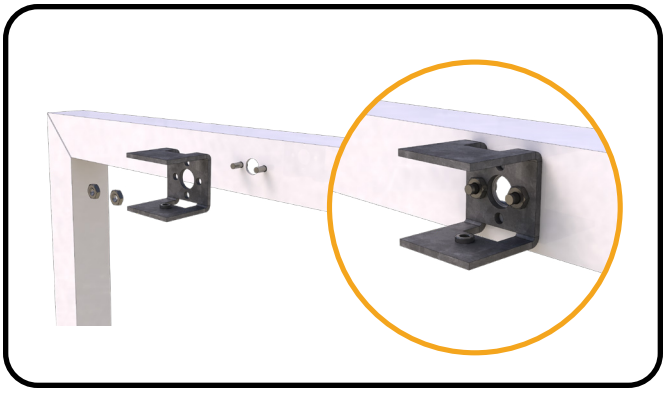

3 Mount second bracket from standoff to fixture with hardware provided by factory. Note stand off mount hole to face the inside of the fixture.

COMPONENTS FOR STANDOFF MOUNTING

The Frame series standoff mounting system consists of two main components: the standoff assembly **(A)** and the remote mount driver box **(B)**. Both items come shipped with the fixture to help ensure proper counts and clarification during assembly.

In preparation of installation, ensure that stand offs and standoff mounting brackets are all accounted for. Be sure to follow all governing code related to wiring, structural integrity, and use of materials.

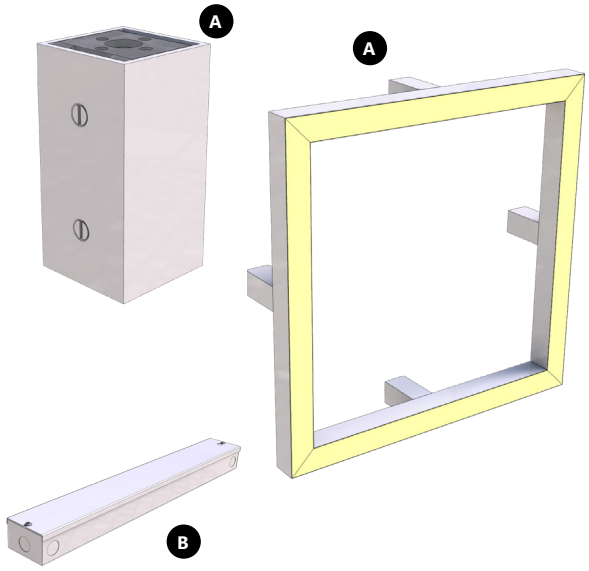

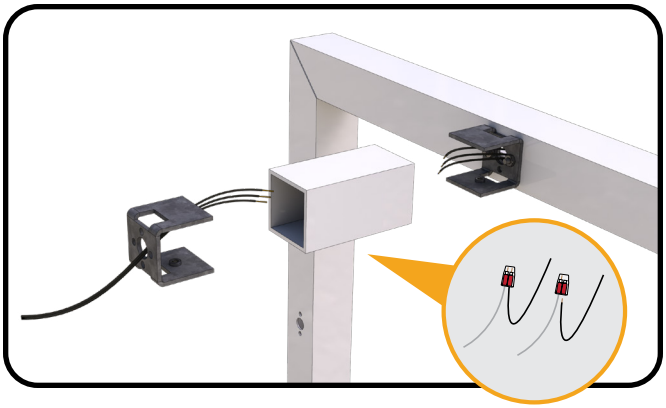

4 **Turn off the power to the fixture's circuit.** Support the fixture at the surface side brackets and connect the wires from the mounting surface to the fixture.

Installation

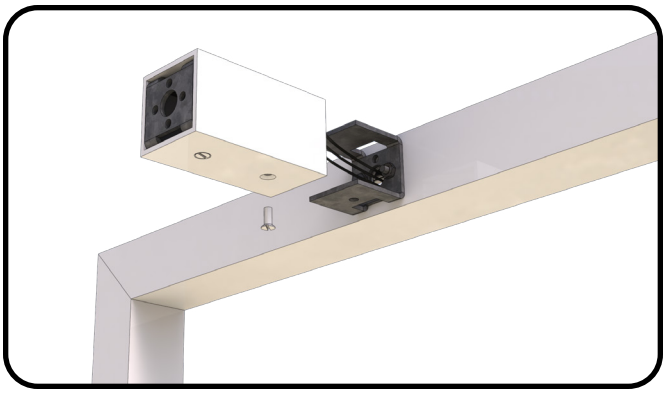

5 Slide standoffs onto surface side brackets and screw into place. Next slide fixture side brackets onto standoffs and screw fixture in place.

This device complies with Part 15 of the FCC Rules. Operation is subject to the following two conditions: (1) This device may not cause harmful interference, and (2) this device must accept any interference received, including interference that may cause undesired operation. CAN ICES-005 (A) / NMB-005 (A)

Note: This equipment has been tested and found to comply with the limits for a Class A digital device, pursuant to part 15 of the FCC Rules. These limits are designed to provide reasonable protection against harmful interference when the equipment is operated in a commercial environment. This equipment generates, uses, and can radiate radio frequency energy and, if not installed and used in accordance with the instruction manual, may cause harmful interference to radio communications. Operation of this equipment in a residential area is likely to cause harmful interference in which case the user will be required to correct the interference at their own expense.

GE current
a Daintree company

www.gecurrent.com

IND739 (Rev 12/13/2021)